Component List:

No.	Pictures	Quantity
A		1PC
C		1PC
E		3PCS
G		1PC
I		1PC

No.	Pictures	Quantity
B	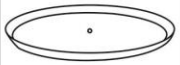	1PC
D	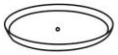	1PC
F		1PC
H		1PC
J		1PC

KARE DESIGN

ASSEMBLY INSTRUCTION

82081-Side Table Jacky Orange
82082-Side Table Jacky Green
82083-Side Table Jacky Grey
82084-Side Table Jacky White

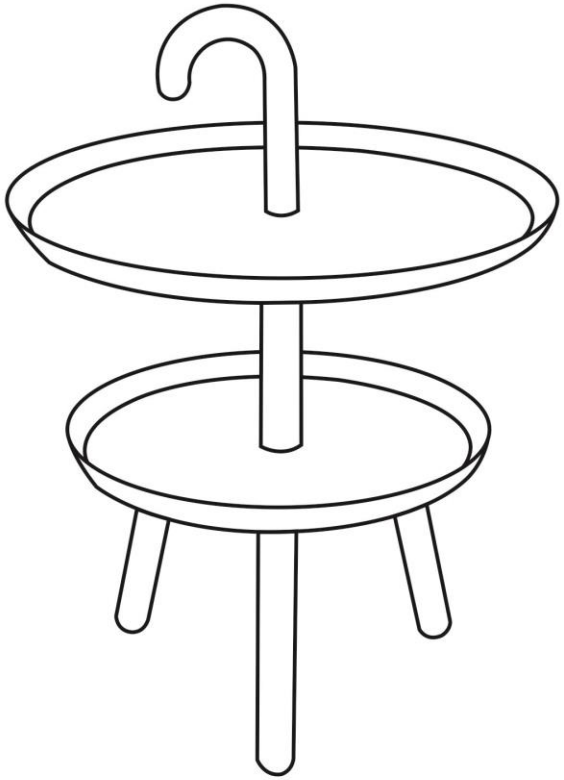

1st step

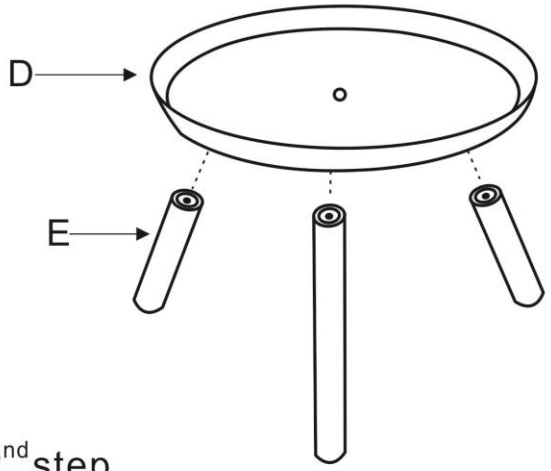

2nd step

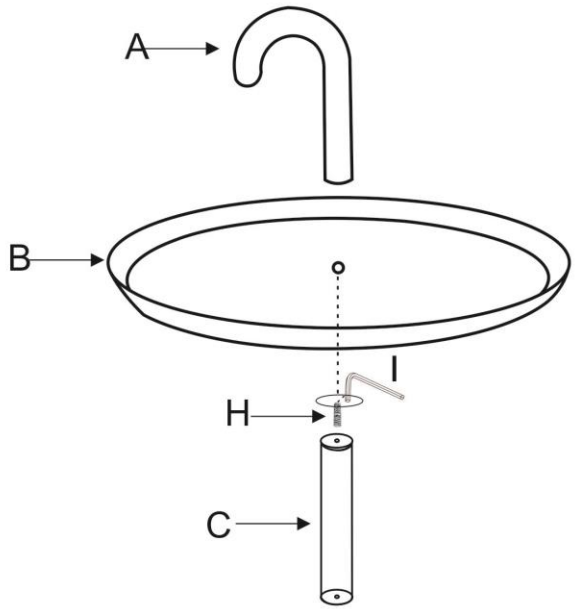

3rd step
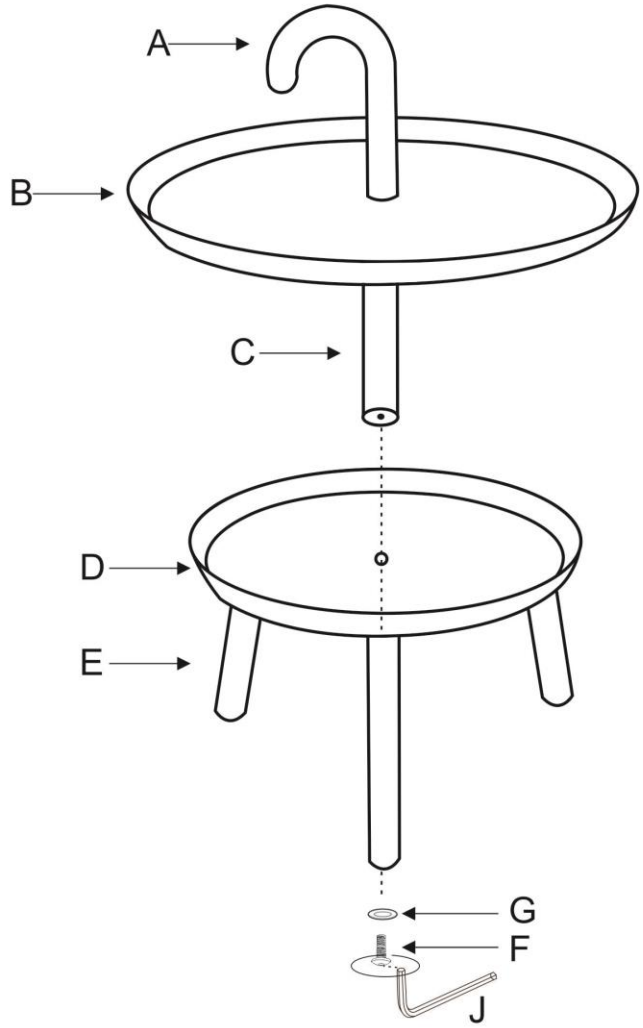
KARE DESIGN