81298 Office Chair Labora High Grey

KARE DESIGN

(1) ×5	(8) ×1L×1R
(2) ×1	(9) ×8 M6*20mm
(3) ×1	(10) ×4 M6*30mm
(4) ×1	(11) ×4 Φ18*Φ6*1.5mmT
(5) ×1	(12) ×8
(6) ×1	(13) ×1 5mm
(7) ×1	

1

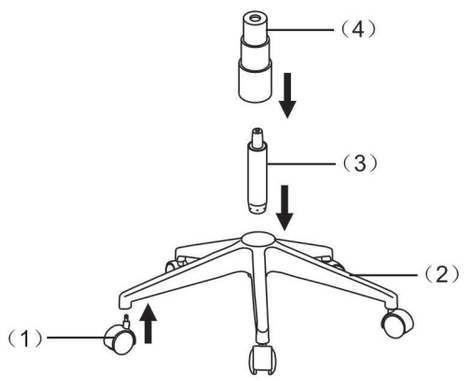

2

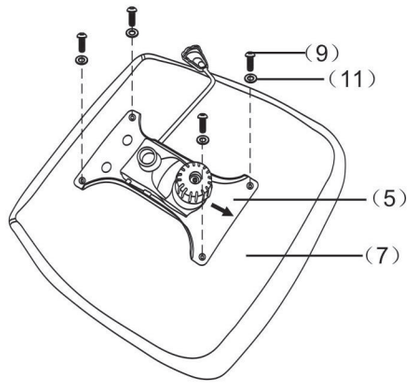

3

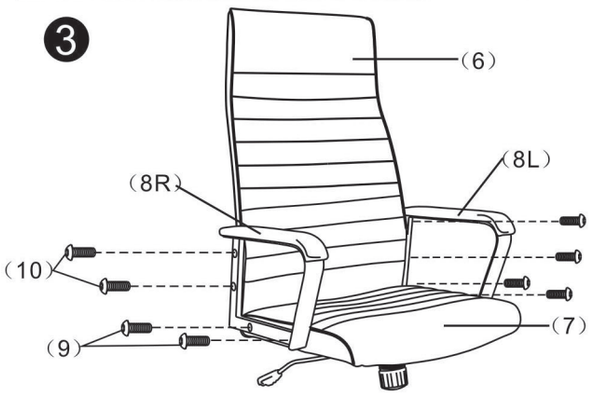

4

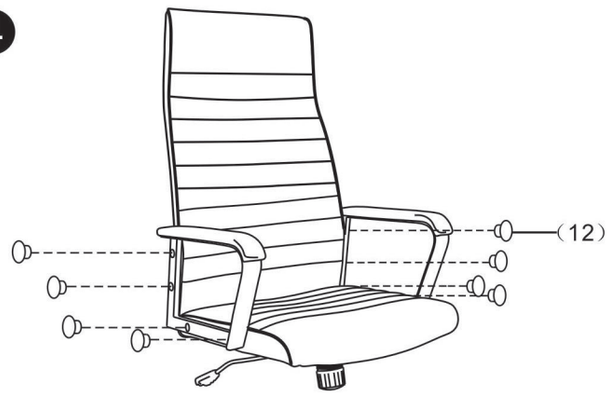

5

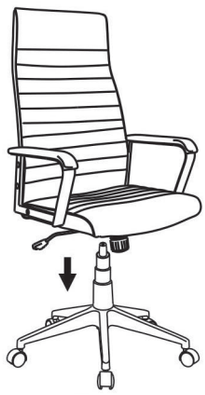

6