KARE DESIGN

30226/30227 TL MURO

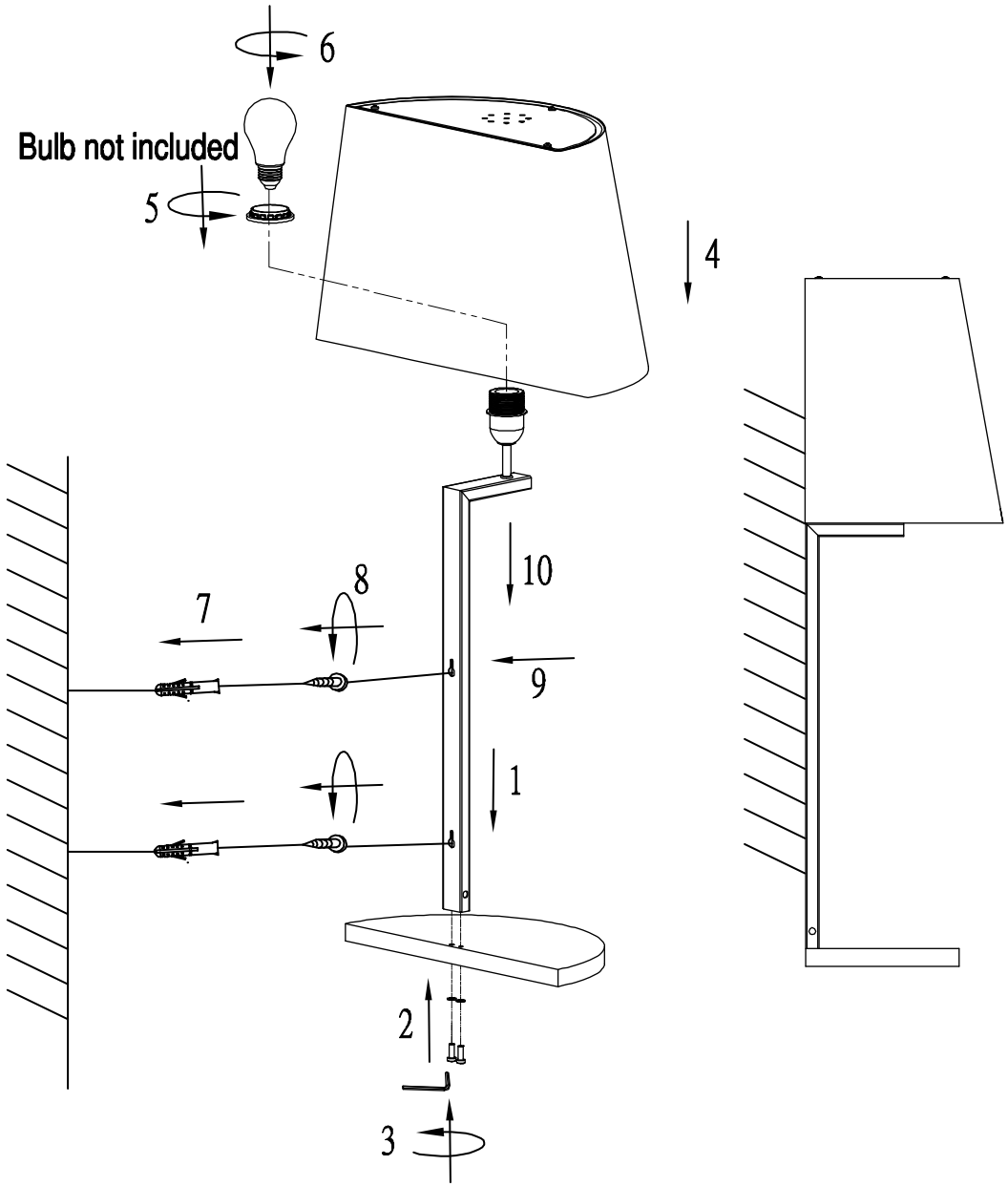

NO	A	B	C	D	E	F	G	H
TYPE			-		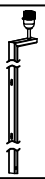			
QTY	1PC	2PCS	2PCS	1PC	1PC	1PC	2PCS	2PCS